* 0000800000001 *

Cambridge Assessment International Education

Cambridge International AS & A Level

CANDIDATE NAME

CENTRE NUMBER

CANDIDATE NUMBER

* 9 8 5 3 2 5 2 6 3 2 *

PHYSICS **9702/21**

Paper 2 AS Level Structured Questions **October/November 2024**

1 hour 15 minutes

You must answer on the question paper.

No additional materials are needed.

INSTRUCTIONS

- Answer **all** questions.
- Use a black or dark blue pen. You may use an HB pencil for any diagrams or graphs.
- Write your name, centre number and candidate number in the boxes at the top of the page.
- Write your answer to each question in the space provided.
- Do **not** use an erasable pen or correction fluid.
- Do **not** write on any bar codes.
- You may use a calculator.
- You should show all your working and use appropriate units.

INFORMATION

- The total mark for this paper is 60.
- The number of marks for each question or part question is shown in brackets [ ].

This document has **16** pages. Any blank pages are indicated.

DC (DE/CGW) 336942/2
© UCLES 2024

[Turn over

Data

acceleration of free fall	g	=	$9.81\ \text{m s}^{-2}$
speed of light in free space	c	=	$3.00 \times 10^{8}\ \text{m s}^{-1}$
elementary charge	e	=	$1.60 \times 10^{-19}\ \text{C}$
unified atomic mass unit	$1\ \text{u}$	=	$1.66 \times 10^{-27}\ \text{kg}$
rest mass of proton	m_p	=	$1.67 \times 10^{-27}\ \text{kg}$
rest mass of electron	m_e	=	$9.11 \times 10^{-31}\ \text{kg}$
Avogadro constant	N_A	=	$6.02 \times 10^{23}\ \text{mol}^{-1}$
molar gas constant	R	=	$8.31\ \text{J K}^{-1}\ \text{mol}^{-1}$
Boltzmann constant	k	=	$1.38 \times 10^{-23}\ \text{J K}^{-1}$
gravitational constant	G	=	$6.67 \times 10^{-11}\ \text{N m}^2\ \text{kg}^{-2}$
permittivity of free space	ε_0	=	$8.85 \times 10^{-12}\ \text{F m}^{-1}$
	$\left(\frac{1}{4\pi\varepsilon_0}\right.$	=	$\left.8.99 \times 10^{9}\ \text{m F}^{-1}\right)$
Planck constant	h	=	$6.63 \times 10^{-34}\ \text{J s}$
Stefan–Boltzmann constant	σ	=	$5.67 \times 10^{-8}\ \text{W m}^{-2}\ \text{K}^{-4}$

Formulae

uniformly accelerated motion	s	=	$ut + \frac{1}{2}at^2$
	v^2	=	$u^2 + 2as$
hydrostatic pressure	Δp	=	$\rho g \Delta h$
upthrust	F	=	$\rho g V$
Doppler effect for sound waves	f_o	=	$\frac{f_\text{s} v}{v \pm v_\text{s}}$
electric current	I	=	$Anvq$
resistors in series	R	=	$R_1 + R_2 + \ldots$
resistors in parallel	$\frac{1}{R}$	=	$\frac{1}{R_1} + \frac{1}{R_2} + \ldots$

DO NOT WRITE IN THIS MARGIN
DO NOT WRITE IN THIS MARGIN
DO NOT WRITE IN THIS MARGIN
DO NOT WRITE IN THIS MARGIN
DO NOT WRITE IN THIS MARGIN

BLANK PAGE

DO NOT WRITE IN THIS MARGIN
DO NOT WRITE IN THIS MARGIN
DO NOT WRITE IN THIS MARGIN
DO NOT WRITE IN THIS MARGIN
DO NOT WRITE IN THIS MARGIN

1 **(a)** Define density.

.....

..... [1]

(b) Fig. 1.1 shows a cuboidal glass block.

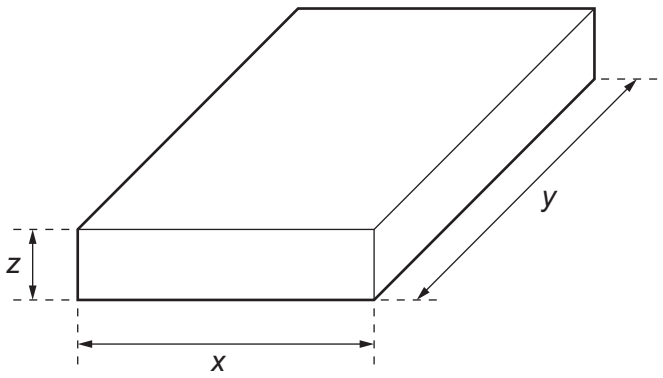

Fig. 1.1 (not to scale)

A student measures the mass m of the block and the side lengths x, y and z. The measurements are shown in Table 1.1.

Table 1.1

quantity	measurement
m	(0.243 ± 0.001) kg
x	(5.41 ± 0.01) cm
y	(11.09 ± 0.01) cm
z	(1.62 ± 0.01) cm

DO NOT WRITE IN THIS MARGIN
DO NOT WRITE IN THIS MARGIN
DO NOT WRITE IN THIS MARGIN
DO NOT WRITE IN THIS MARGIN
DO NOT WRITE IN THIS MARGIN

(i) Determine the density of the glass.

density = ... $kg\,m^{-3}$ [2]

(ii) Calculate the percentage uncertainty in the density.

percentage uncertainty = ...% [3]

(c) The true value of the density of the glass is different from the answer in **(b)(i)** because of a systematic error in the measurements.

Suggest **one** possible cause of this systematic error.

.....

.....

..... [1]

[Total: 7]

DO NOT WRITE IN THIS MARGIN
DO NOT WRITE IN THIS MARGIN
DO NOT WRITE IN THIS MARGIN
DO NOT WRITE IN THIS MARGIN
DO NOT WRITE IN THIS MARGIN

2 **(a)** Define linear momentum.

.....

..... [1]

(b) A car of mass 1800 kg is moving in a straight line. Fig. 2.1 shows the variation with time t of the momentum p of the car.

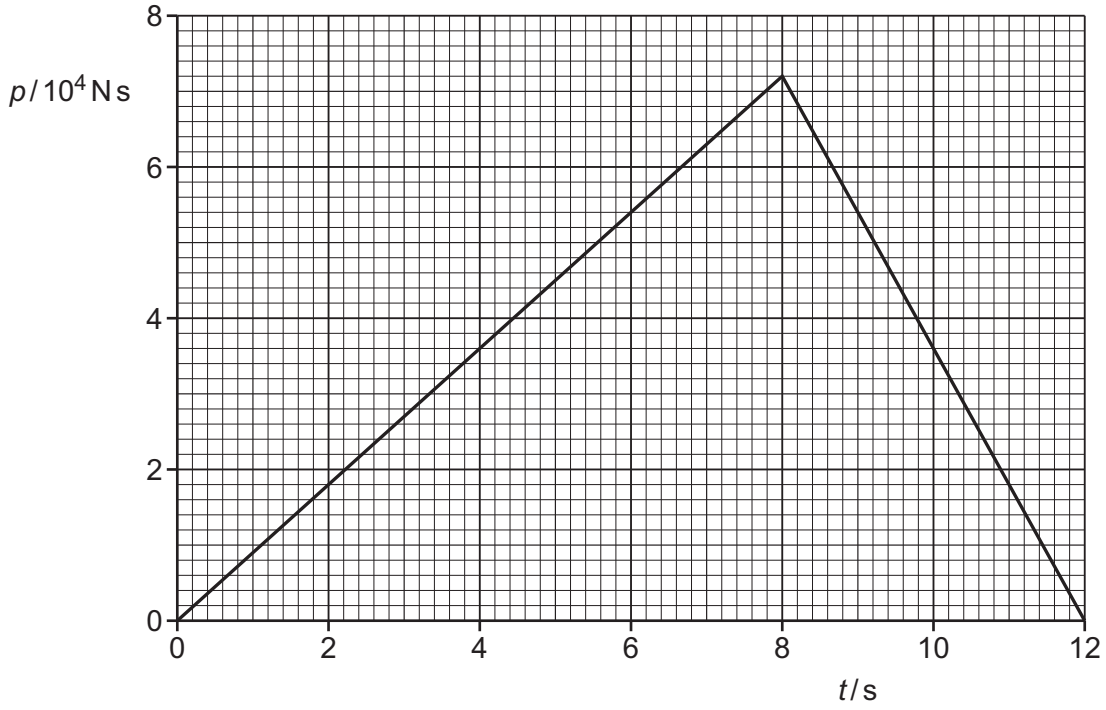

Fig. 2.1

(i) Calculate the maximum speed reached by the car.

maximum speed = ... $m\,s^{-1}$ [1]

(ii) Calculate the maximum kinetic energy of the car.

maximum kinetic energy = ... J [2]

DO NOT WRITE IN THIS MARGIN
DO NOT WRITE IN THIS MARGIN
DO NOT WRITE IN THIS MARGIN
DO NOT WRITE IN THIS MARGIN
DO NOT WRITE IN THIS MARGIN

(iii) Show that the acceleration of the car at time $t = 4.0\,s$ is $5.0\,m\,s^{-2}$.

[2]

(iv) Determine the distance travelled by the car between times $t = 0$ and $t = 12.0\,s$.

distance = ... m [2]

(c) On Fig. 2.2, sketch the variation with time t of the acceleration a of the car in **(b)** from $t = 0$ to $t = 12.0\,s$.

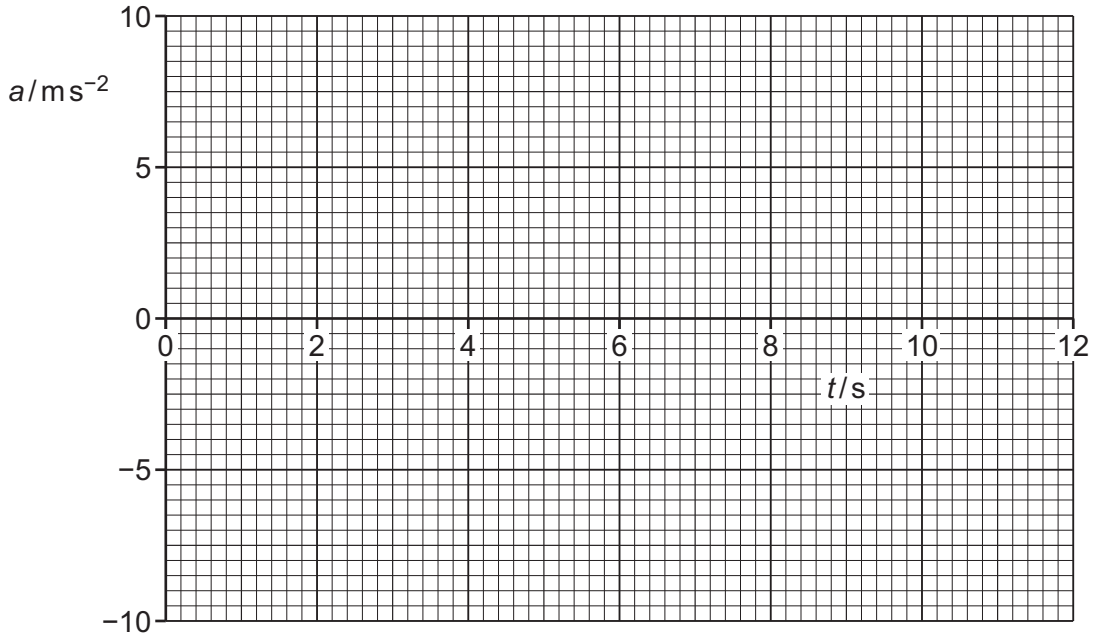

Fig. 2.2

[3]

[Total: 11]

DO NOT WRITE IN THIS MARGIN
DO NOT WRITE IN THIS MARGIN
DO NOT WRITE IN THIS MARGIN
DO NOT WRITE IN THIS MARGIN
DO NOT WRITE IN THIS MARGIN

3 **(a)** State what is meant by the work done by a force.

.....

..... [1]

(b) A block of mass m is raised vertically at constant speed. The vertical height gained by the block is Δh, as shown in Fig. 3.1.

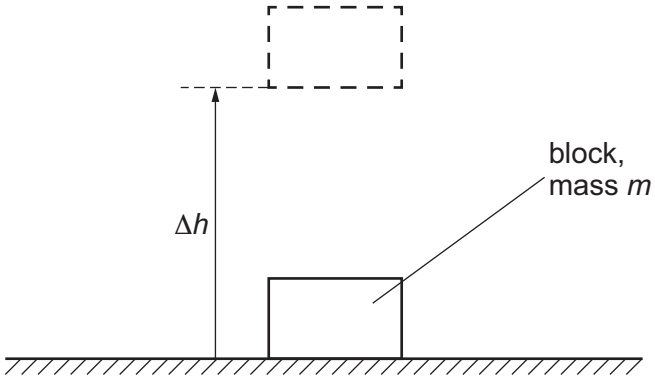

Fig. 3.1

Derive an expression, in terms of m and Δh, for the change in gravitational potential energy ΔE_P of the block. State the meaning of any other symbols you use.

[2]

(c) An electric motor has an input power of 900 W. The motor takes 1.0 minute to lift a load of weight 240 N at constant speed through a vertical height of 150 m. Resistive forces are negligible.

(i) Show that the work done by the motor on the load in 1.0 minute is 36 kJ.

[1]

DO NOT WRITE IN THIS MARGIN
DO NOT WRITE IN THIS MARGIN
DO NOT WRITE IN THIS MARGIN
DO NOT WRITE IN THIS MARGIN
DO NOT WRITE IN THIS MARGIN

(ii) Determine the useful output power of the motor.

power = ... W [2]

(iii) Use your answer in **(c)(ii)** to determine the efficiency of the motor.

efficiency = ... [2]

(iv) Some of the power wasted in the motor is dissipated by the resistance of its coil. This dissipated power is 280 W.

The coil of the motor is made from wire of total length 23 m. The wire has a cross-sectional area of $2.6 \times 10^{-8}\,m^2$ and is made from metal of resistivity $1.7 \times 10^{-8}\,\Omega m$.

Calculate the current in the coil.

current = ...A [3]

[Total: 11]

DO NOT WRITE IN THIS MARGIN
DO NOT WRITE IN THIS MARGIN
DO NOT WRITE IN THIS MARGIN
DO NOT WRITE IN THIS MARGIN
DO NOT WRITE IN THIS MARGIN

4 **(a)** Define the Young modulus of a material.

.....

..... [1]

(b) A metal wire P that obeys Hooke's law is stretched within its limit of proportionality.

(i) On Fig. 4.1, sketch the variation of tensile force *F* in the wire with its extension *x*.

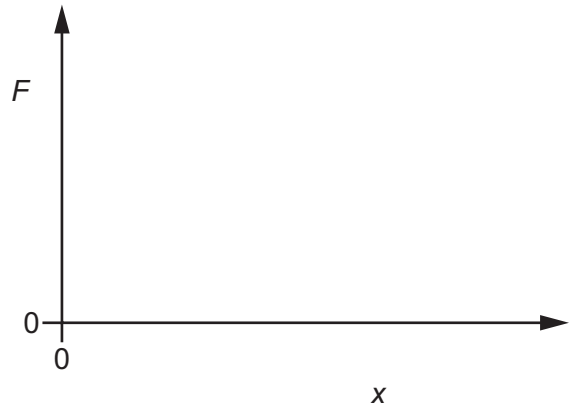

Fig. 4.1

[1]

(ii) State the name of the quantity represented by the gradient of the line in Fig. 4.1.

..... [1]

(iii) State the name of the quantity represented by the area under the line in Fig. 4.1.

..... [1]

(c) Another wire Q is made from a metal that has twice the Young modulus of the metal of wire P in **(b)**. Wire Q has the same volume as wire P but has double the cross-sectional area of wire P.

The two wires are extended by equal tensile forces within their limits of proportionality.

State and explain how the extension of wire Q compares with the extension of wire P.

.....

.....

.....

.....

..... [3]

[Total: 7]

DO NOT WRITE IN THIS MARGIN
DO NOT WRITE IN THIS MARGIN
DO NOT WRITE IN THIS MARGIN
DO NOT WRITE IN THIS MARGIN
DO NOT WRITE IN THIS MARGIN

DO NOT WRITE IN THIS MARGIN
DO NOT WRITE IN THIS MARGIN
DO NOT WRITE IN THIS MARGIN
DO NOT WRITE IN THIS MARGIN
DO NOT WRITE IN THIS MARGIN

5 **(a)** Potassium-40 ($^{40}_{19}K$) undergoes β^- decay to form a nuclide of element X. Particle Z is emitted during the decay. The equation for the decay is shown.

$$^{40}_{19}K \rightarrow {}^{P}_{Q}X + {}^{R}_{S}\beta^- + Z$$

(i) State the values of *P*, *Q*, *R* and *S*.

P = ... *R* = ...

Q = ... *S* = ...

[2]

(ii) State the name of particle Z.

..... [1]

(iii) State the name of the class of fundamental particle to which both the β^- particle and particle Z belong.

..... [1]

(b) Determine the quark composition of an alpha-particle.

quark composition ..... [3]

[Total: 7]

6 Two coherent sources X and Y of microwaves of frequency 2.5×10^{10} Hz are a distance of 0.18 m apart in a vacuum, as shown in Fig. 6.1.

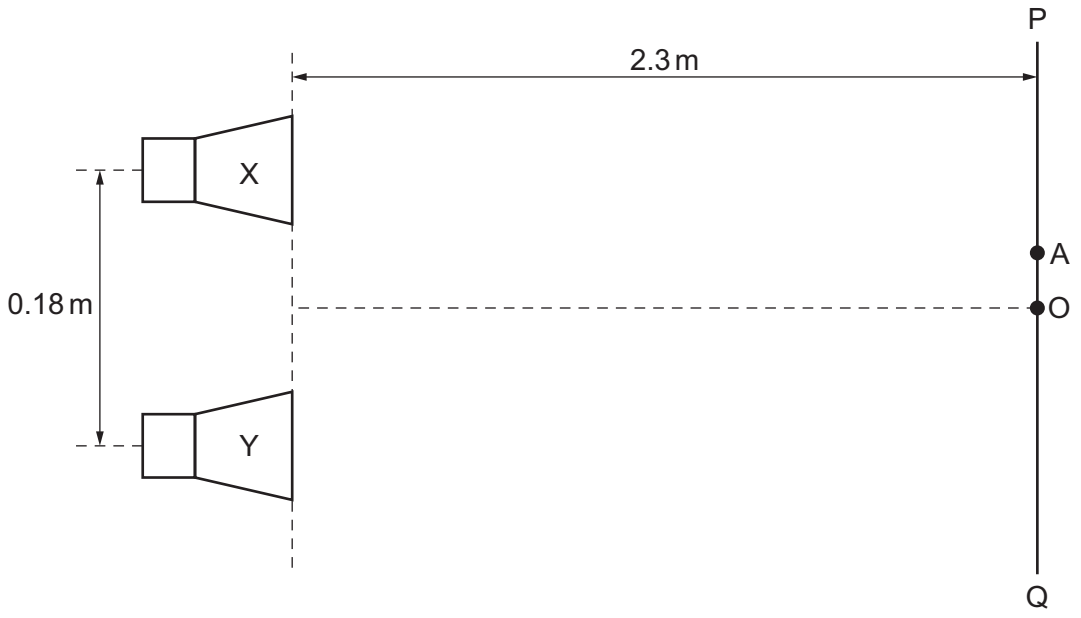

Fig. 6.1 (not to scale)

There is a phase difference of 90° between the waves emitted at the two sources.

A microwave detector moves along the line PQ, which is parallel to the line joining the two sources and 2.3 m away from it.

Point O is on the line PQ at a position that is equidistant from the two sources.
Point A is the position on line PQ where the intensity of the microwaves is the greatest.

(a) (i) Explain why the position of greatest intensity is **not** at point O.

.....

.....

.....

..... [2]

(ii) On Fig. 6.1, draw a cross (×) to show the position of the point on line PQ where the intensity minimum that is the closest to point O occurs. Label this point B. [2]

DO NOT WRITE IN THIS MARGIN
DO NOT WRITE IN THIS MARGIN
DO NOT WRITE IN THIS MARGIN
DO NOT WRITE IN THIS MARGIN
DO NOT WRITE IN THIS MARGIN

(b) (i) Show that the wavelength of the microwaves is 0.012 m.

[2]

(ii) For point A on line PQ, determine the difference in the distances Δx travelled by the microwaves from X and the microwaves from Y.

Δx = ... m [1]

(iii) Use the formula for the double-slit interference of light to calculate the distance between adjacent intensity maxima on line PQ.

distance = ... m [2]

[Total: 9]

DO NOT WRITE IN THIS MARGIN
DO NOT WRITE IN THIS MARGIN
DO NOT WRITE IN THIS MARGIN
DO NOT WRITE IN THIS MARGIN
DO NOT WRITE IN THIS MARGIN

7 **(a)** Fig. 7.1 shows two resistors connected in series with a cell of electromotive force (e.m.f.) 1.50 V and internal resistance 0.28 Ω.

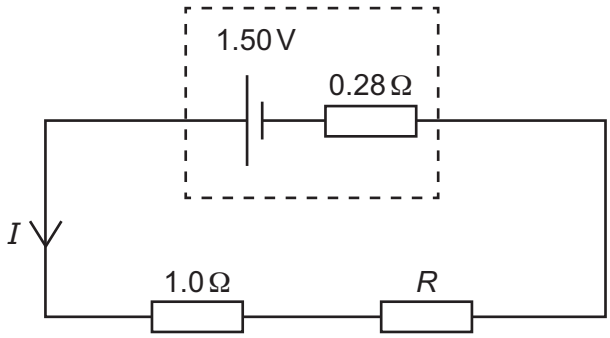

Fig. 7.1

One of the resistors has resistance 1.0 Ω. The other resistor has resistance *R*.
The terminal potential difference (p.d.) across the cell is 1.36 V.

(i) Show that the current *I* in the circuit is 0.50 A.

[2]

(ii) Calculate the combined resistance of the two resistors.

resistance = ... Ω [2]

(iii) Use your answer in **(a)(ii)** to determine resistance *R*.

R = ... Ω [1]

DO NOT WRITE IN THIS MARGIN
DO NOT WRITE IN THIS MARGIN
DO NOT WRITE IN THIS MARGIN
DO NOT WRITE IN THIS MARGIN
DO NOT WRITE IN THIS MARGIN

DO NOT WRITE IN THIS MARGIN
DO NOT WRITE IN THIS MARGIN
DO NOT WRITE IN THIS MARGIN
DO NOT WRITE IN THIS MARGIN
DO NOT WRITE IN THIS MARGIN

(b) The circuit in Fig. 7.1 is disconnected and the two resistors are reconnected to the cell, now in parallel with each other.

(i) On Fig. 7.2, complete the circuit diagram to show this arrangement.

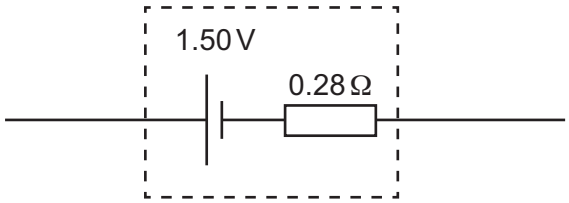

Fig. 7.2

[1]

(ii) Explain, without calculation, whether the terminal p.d. across the cell is now less than, equal to or greater than 1.36 V.

.....

.....

..... [2]

[Total: 8]

BLANK PAGE

DO NOT WRITE IN THIS MARGIN
DO NOT WRITE IN THIS MARGIN
DO NOT WRITE IN THIS MARGIN
DO NOT WRITE IN THIS MARGIN
DO NOT WRITE IN THIS MARGIN

Permission to reproduce items where third-party owned material protected by copyright is included has been sought and cleared where possible. Every reasonable effort has been made by the publisher (UCLES) to trace copyright holders, but if any items requiring clearance have unwittingly been included, the publisher will be pleased to make amends at the earliest possible opportunity.

To avoid the issue of disclosure of answer-related information to candidates, all copyright acknowledgements are reproduced online in the Cambridge Assessment International Education Copyright Acknowledgements Booklet. This is produced for each series of examinations and is freely available to download at www.cambridgeinternational.org after the live examination series.

Cambridge Assessment International Education is part of Cambridge Assessment. Cambridge Assessment is the brand name of the University of Cambridge Local Examinations Syndicate (UCLES), which is a department of the University of Cambridge.